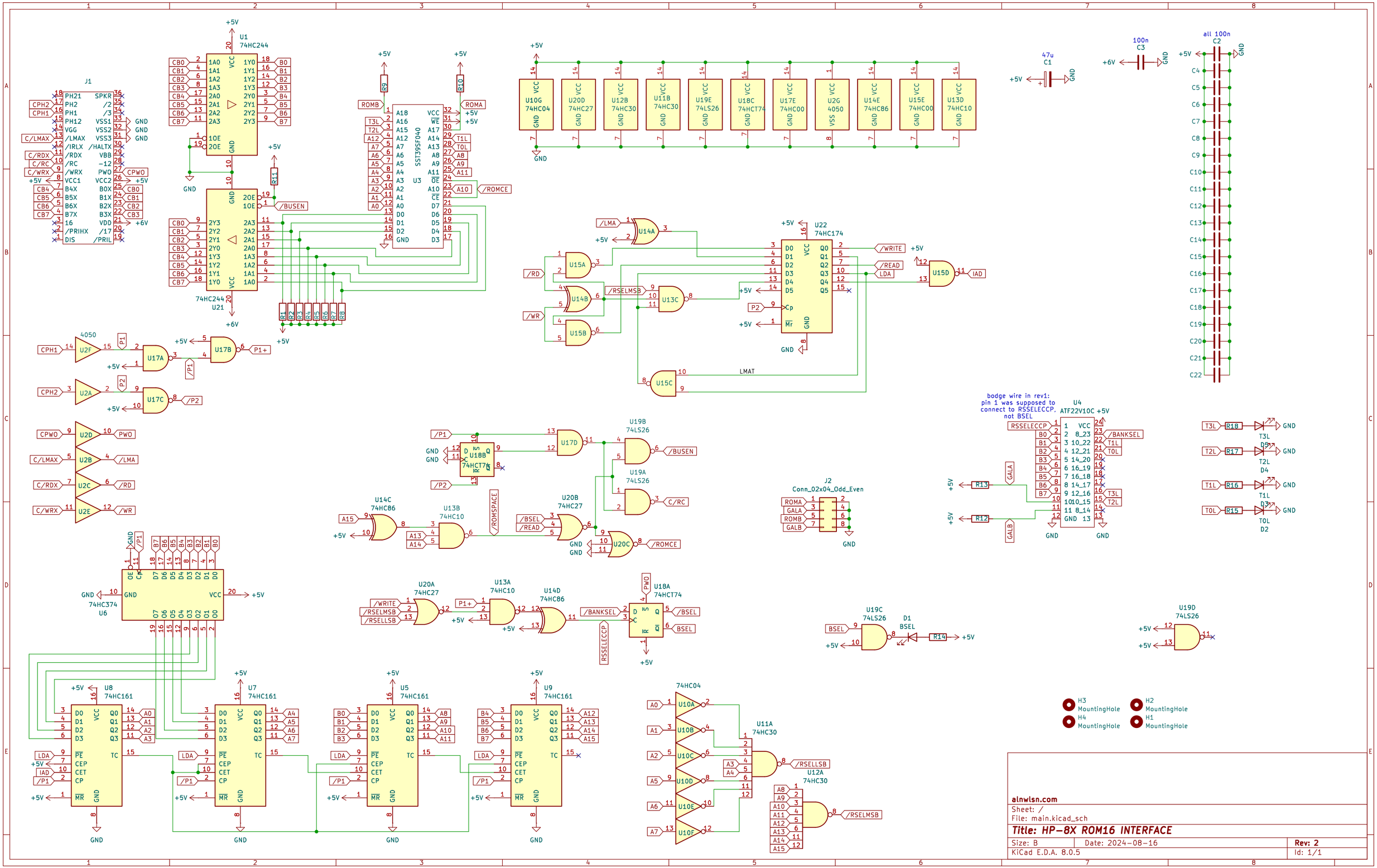
J1
U1 74HC244
74HC244 U21
U3 SST39SF040
U22 74HC174
U4 ATF22V10C
J2 Conn_02x04_Odd_Even
U6 74HC374
U8 74HC161
U7 74HC161
U5 74HC161
U9 74HC161
U10G 74HC04
U20D 74HC27
U12B 74HC30
U11B 74HC30
U19E 74LS26
U18C 74HCT74
U17E 74HC00
U2G 4050
U14E 74HC86
U15E 74HC00
U13D 74HC10
U2F 4050
U17A
U17B
U17C
U2A
U2D
U2B
U2C
U2E
U14A
U15A
U14B
U15B
U13C
U15C
U15D
U17D
U18B 74HCT74
U19B 74LS26
U19A 74LS26
U20C
U14C 74HC86
U13B 74HC10
U20B 74HC27
U20A 74HC27
U13A 74HC10
U14D 74HC86
U18A 74HCT74
U19C 74LS26
U19D 74LS26
U10A
U10B
U10C
U10D
U10E
U10F
U11A 74HC30
U12A 74HC30
all 100n
47u
100n
bodge wire in rev1:
pin 1 was supposed to
connect to RSSELECCP,
not BSEL
H3 MountingHole
H4 MountingHole
H2 MountingHole
H1 MountingHole
alnwlsn.com
Sheet: /
File: main.kicad_sch
Title: HP-8X ROM16 INTERFACE
Size: B
Date: 2024-08-16
Rev: 2
KiCad E.D.A. 8.0.5
Id: 1/1